PRESIDENCY UNIVERSITY

GAIN MORE KNOWLEDGE
REACH GREATER HEIGHTS

A Report on

"MULTIFUNCTION ROVER"

20201CSE0171	D Sree Bhargav Reddy
20201CSE0116	M Abhiram Reddy
20201CSE0134	Arjun Arun
20201CSE0133	B Sravan Kumar Reddy
20201CSE0170	K Babu

Under the guidance of

Mr. Prakash B Metre

School of Computer Science & Engineering

Presidency University

TABLE OF CONTENT

1. Aim
2. Components
3. Abstract
4. Introduction
5. Architecture
6. Component Connection
7. Code
8. Model screenshot
9. Individual contribution

AIM: MULTIFUNCTION ROVER

COMPONENTS REQUIRED:

- Arduino Uno R3
- L298N Motor Driver
- Ultrasonic Sensor
- Servo Motor
- HC-06 Bluetooth Module
- TP4056 Charging Module – Type C
- Solar Panel 6v
- 18650 li-ion Battery 3.7v
- 2 Pin Switch
- 18650 Battery Holder
- Jumper Wires
- 5 mm Led
- 1K Resistors
- Chassis (Including motors and wheels)

ABSTRACT:

Rovers are important for conducting in-situ scientific analysis of objectives that are separated by many meters to tens of kilometres. Current mobility designs are complex, using many wheels or legs. They are open to mechanical failure caused by the harsh environment. This thesis describes IOT Based Rover, a four wheeled rover capable of traversing rough terrain using an efficient high degree of mobility suspension system. The primary mechanical feature of the IOT Based Rover design is its drive train simplicity, which is accomplished by using only two motors for mobility. Both motors are located inside the body where thermal variation is kept to a minimum, increasing reliability and efficiency. Four wheels are used because there are few obstacles on natural terrain that require both front wheels of the rover to climb simultaneously. This can be done in 2WD,4WD.6WD according to the need of the purpose.

INTRODUCTION:

- This is an Rover which is used in domestic areas.
- In this project, one can control the robot with the help of mobile or laptop through Internet of Things (IoT)
- And also can get the live streaming of video with the help of wireless camera from the Rover.
- Multiple functions Controlling of the rover.
- Ultrasonic Sensor and Servo Motor will find the Obstacle.
- 6v mini solar panel and TP4056 module battery will charge.
- HC -06 Module we can control the Rover using Android application.
- Voice control using application.

ARCHITECTURE:

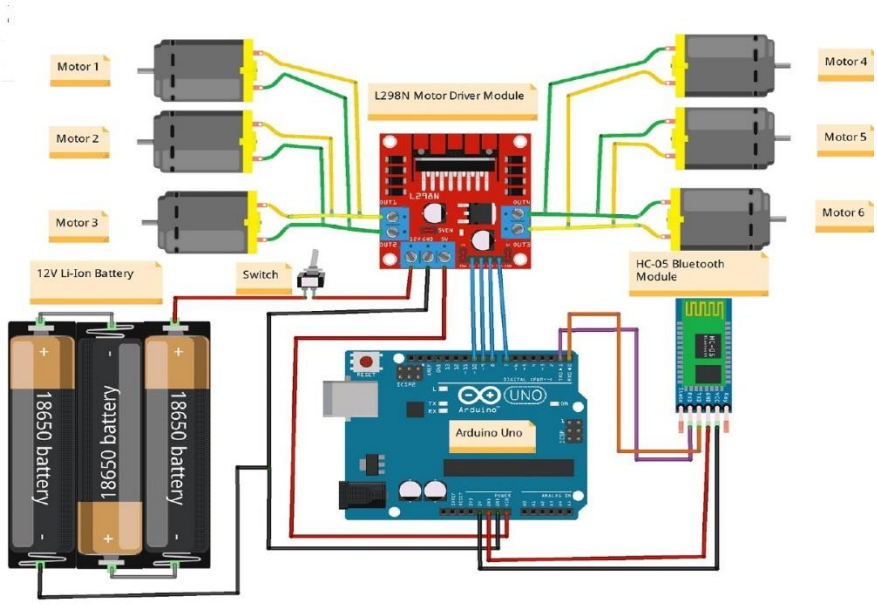

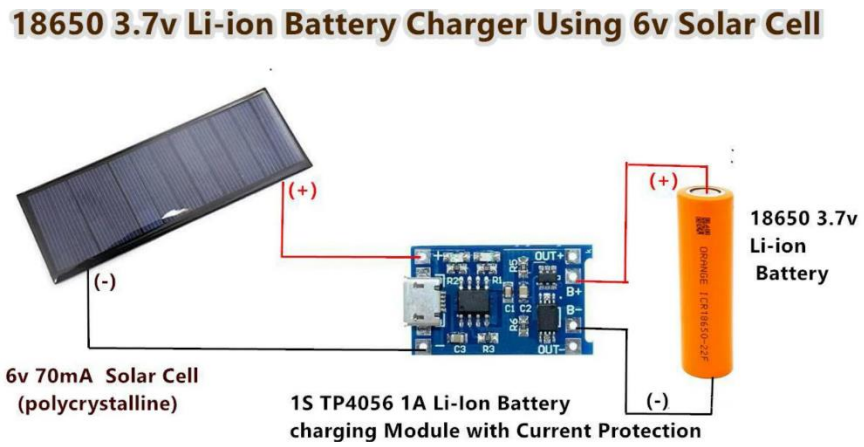

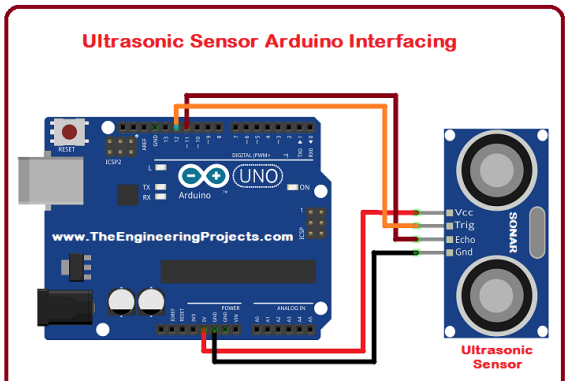

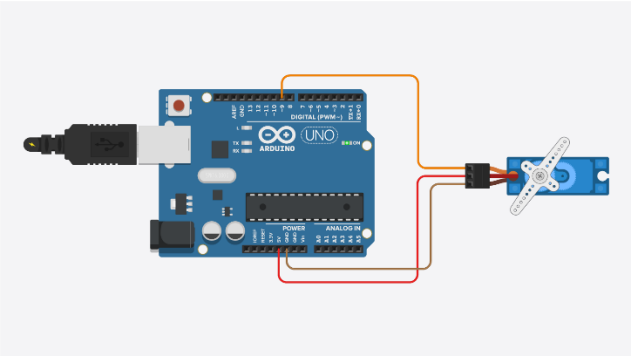

ROVER

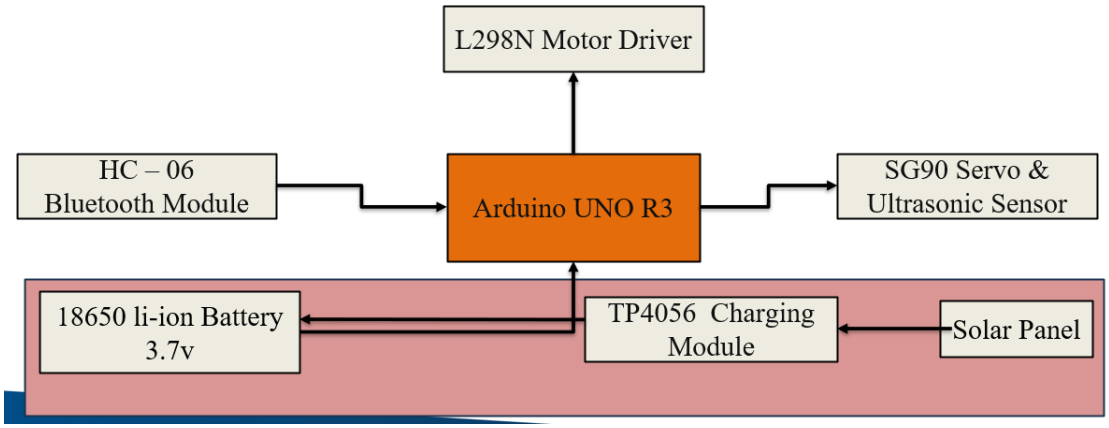

COMPONENTS CONNECTIONS

Proximity sensor **VCC(red)**	**Arduino uno board** **5v**
GND	**GND**
L298N Driver: **ENA** **IN1** **IN2** **IN3** **IN4**	 **Pin 10** **Pin 9** **Pin 8** **Pin 7** **Pin 6**

ENB	**Pin5**
(Hc-06) RXD	**Pin 3**
(Hc-06) TXD	**Pin 2**
Servo Motor	**A4**
US-echo **US-trigger**	**A2** **A3**

FUNCTIONALITY

- Connect a female jumper wire in the Proximity sensor. After connecting female jumper wires in proximity sensor then connect to the Arduino Uno board.
- Now take a Servo Motor and here you can see wire pinout details of a servo motor.
- After taking a servo motor now connect the male wire to a servo motor
- After connecting a male wire to the servo motor then connect to the Arduino Uno board.
- Connect the input pins from L298N in the Arduino board.
- Now connect the DC Motors to the L298N.
- Hc-06 Bluetooth Model connections should be given in the Arduino.
- Now as you follow the above procedure can see all the connection is done in your model, now you have to upload the code in the Arduino board.

CODE:

```
#include <SoftwareSerial.h>
SoftwareSerial BT_Serial(2, 3); // RX, TX

#include <IRremote.h>
const int RECV_PIN = A5;
IRrecv irrecv(RECV_PIN);
decode_results results;

#define enA 10//Enable1 L298 Pin enA
#define in1 9 //Motor1  L298 Pin in1
#define in2 8 //Motor1  L298 Pin in1
#define in3 7 //Motor2  L298 Pin in1
#define in4 6 //Motor2  L298 Pin in1
#define enB 5 //Enable2 L298 Pin enB

#define servo A4
#define echo A2    //Echo pin
#define trigger A3 //Trigger pin

int distance_L, distance_F = 30, distance_R;
long distance;
int set = 20;

int bt_ir_data; // variable to receive data from the serial port and IRremote
int Speed = 130;
```

```
int mode=0;
int IR_data;

void setup(){ // put your setup code here, to run once

pinMode(echo, INPUT );// declare ultrasonic sensor Echo pin as input
pinMode(trigger, OUTPUT); // declare ultrasonic sensor Trigger pin as
Output

pinMode(enA, OUTPUT); // declare as output for L298 Pin enA
pinMode(in1, OUTPUT); // declare as output for L298 Pin in1
pinMode(in2, OUTPUT); // declare as output for L298 Pin in2
pinMode(in3, OUTPUT); // declare as output for L298 Pin in3
pinMode(in4, OUTPUT); // declare as output for L298 Pin in4
pinMode(enB, OUTPUT); // declare as output for L298 Pin enB

irrecv.enableIRIn(); // Start the receiver
irrecv.blink13(true);

Serial.begin(9600); // start serial communication at 9600bps
BT_Serial.begin(9600);

pinMode(servo, OUTPUT);

 for (int angle = 70; angle <= 140; angle += 5)  {
   servoPulse(servo, angle);  }
```

```
 for (int angle = 140; angle >= 0; angle -= 5)  {
   servoPulse(servo, angle);  }

 for (int angle = 0; angle <= 70; angle += 5)  {
   servoPulse(servo, angle);  }
delay(500);
}
```

==========

Obstacle Avoiding Control

==========

```
 distance_F = Ultrasonic_read();
 Serial.print("S=");Serial.println(distance_F);
  if (distance_F > set){forword();}
    else{Check_side();}
}

delay(10);
}

long IRremote_data(){
     if(results.value==0xFF02FD){IR_data=1;}
else if(results.value==0xFF9867){IR_data=2;}
else if(results.value==0xFFE01F){IR_data=3;}
else if(results.value==0xFF906F){IR_data=4;}
else if(results.value==0xFF629D || results.value==0xFFA857){IR_data=5;}
```

```
else if(results.value==0xFF30CF){IR_data=8;}
else if(results.value==0xFF18E7){IR_data=9;}
else if(results.value==0xFF7A85){IR_data=10;}
return IR_data;
}

void servoPulse (int pin, int angle){
int pwm = (angle*11) + 500;      // Convert angle to microseconds
 digitalWrite(pin, HIGH);
 delayMicroseconds(pwm);
 digitalWrite(pin, LOW);
 delay(50);                  // Refresh cycle of servo
}

//*********************Ultrasonic_read***************************
long Ultrasonic_read(){
  digitalWrite(trigger, LOW);
  delayMicroseconds(2);
  digitalWrite(trigger, HIGH);
  delayMicroseconds(10);
  distance = pulseIn (echo, HIGH);
  return distance / 29 / 2;
}

void compareDistance(){
      if (distance_L > distance_R){
```

```
  turnLeft();
  delay(350);
  }
  else if (distance_R > distance_L){
  turnRight();
  delay(350);
  }
  else{
  backword();
  delay(300);
  turnRight();
  delay(600);
  }
}

void Check_side(){
    Stop();
    delay(100);
 for (int angle = 70; angle <= 140; angle += 5)  {
   servoPulse(servo, angle);  }
    delay(300);
    distance_L = Ultrasonic_read();
    delay(100);
  for (int angle = 140; angle >= 0; angle -= 5)  {
   servoPulse(servo, angle);  }
    delay(500);
```

```
   distance_R = Ultrasonic_read();
   delay(100);
 for (int angle = 0; angle <= 70; angle += 5)  {
  servoPulse(servo, angle);  }
   delay(300);
   compareDistance();
}

void forword(){  //forword
digitalWrite(in1, HIGH); //Right Motor forword Pin
digitalWrite(in2, LOW);  //Right Motor backword Pin
digitalWrite(in3, LOW);  //Left Motor backword Pin
digitalWrite(in4, HIGH); //Left Motor forword Pin
}

void backword(){ //backword
digitalWrite(in1, LOW);  //Right Motor forword Pin
digitalWrite(in2, HIGH); //Right Motor backword Pin
digitalWrite(in3, HIGH); //Left Motor backword Pin
digitalWrite(in4, LOW);  //Left Motor forword Pin
}
void turnRight(){ //turnRight
digitalWrite(in1, LOW);  //Right Motor forword Pin
digitalWrite(in2, HIGH); //Right Motor backword Pin
digitalWrite(in3, LOW);  //Left Motor backword Pin
digitalWrite(in4, HIGH); //Left Motor forword Pin
```

```
}

void turnLeft(){ //turnLeft
digitalWrite(in1, HIGH); //Right Motor forword Pin
digitalWrite(in2, LOW);  //Right Motor backword Pin
digitalWrite(in3, HIGH); //Left Motor backword Pin
digitalWrite(in4, LOW);  //Left Motor forword Pin
}

void Stop(){ //stop
digitalWrite(in1, LOW); //Right Motor forword Pin
digitalWrite(in2, LOW); //Right Motor backword Pin
digitalWrite(in3, LOW); //Left Motor backword Pin
digitalWrite(in4, LOW); //Left Motor forword Pin
}
==========================================================
                    Voice Control Command
==========================================================
else if(bt_ir_data == 6){turnLeft();  delay(400);  bt_ir_data = 5;}
else if(bt_ir_data == 7){turnRight(); delay(400);  bt_ir_data = 5;}
}
```

MODEL SCREENSHOT

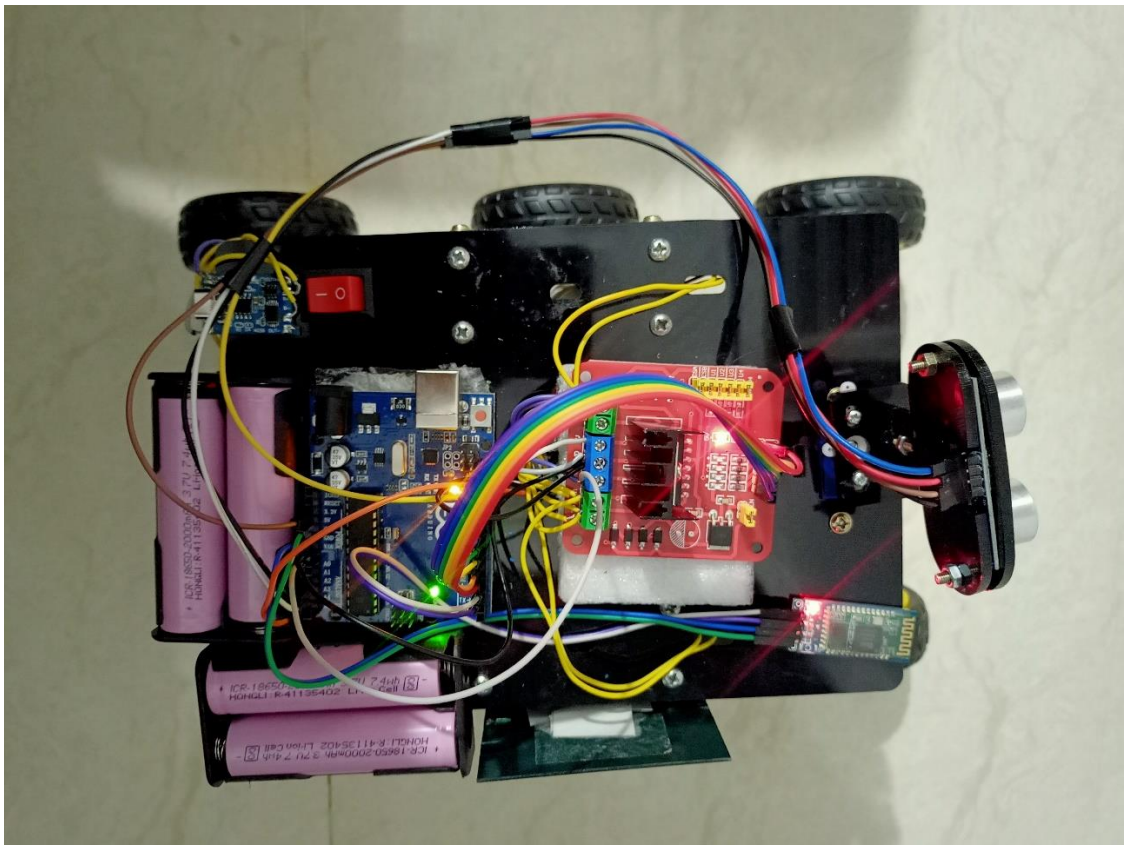

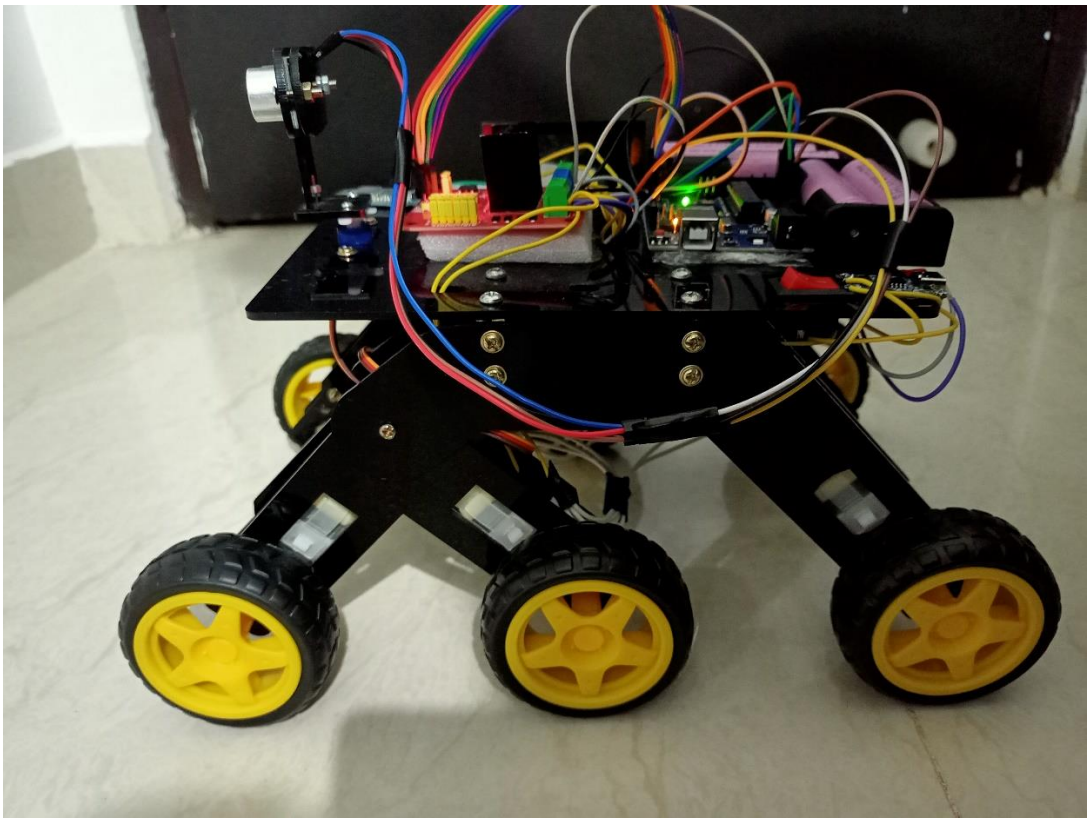

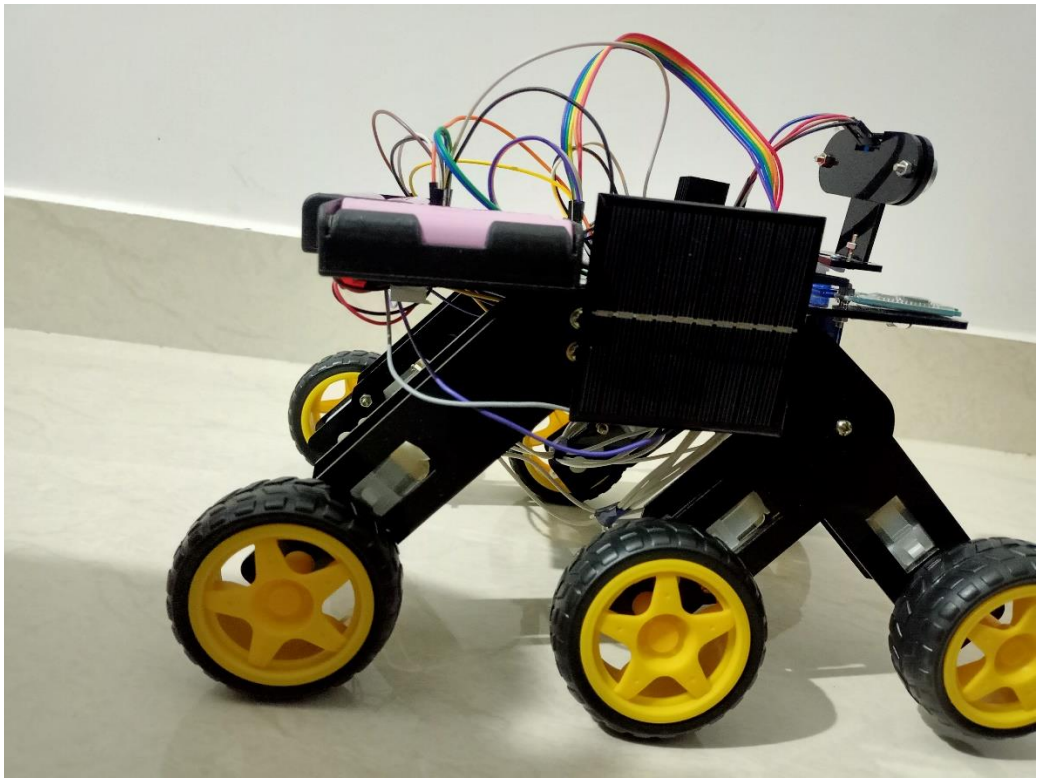

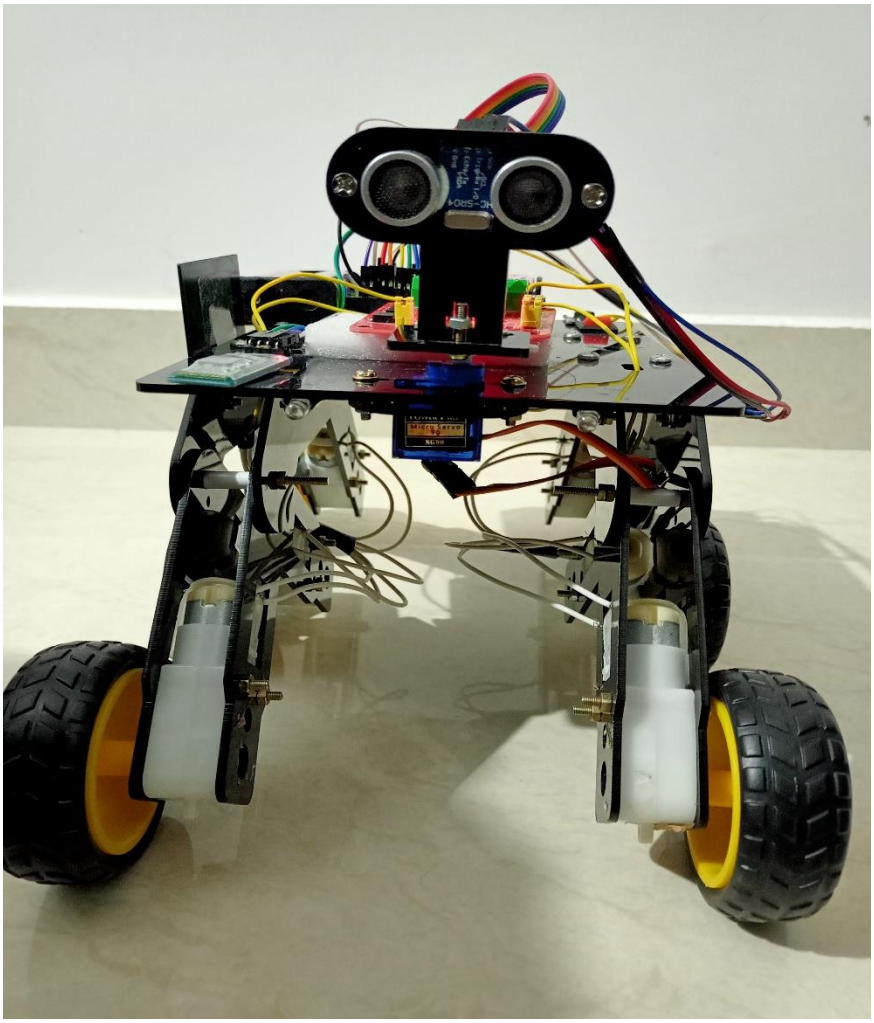

CODE IN ARDUINO IDE:

All_in_One_Robot | Arduino IDE 2.2.1

File Edit Sketch Tools Help

Arduino Uno

All_in_One_Robot.ino

```
#include <SoftwareSerial.h>
SoftwareSerial BT_Serial(2, 3); // RX, TX

#include <IRremote.h>
const int RECV_PIN = A5;
IRrecv irrecv(RECV_PIN);
decode_results results;

#define enA 10//Enable1 L298 Pin enA
#define in1 9 //Motor1  L298 Pin in1
#define in2 8 //Motor1  L298 Pin in1
#define in3 7 //Motor2  L298 Pin in1
#define in4 6 //Motor2  L298 Pin in1
#define enB 5 //Enable2 L298 Pin enB

#define servo A4
```

Output Serial Monitor

```
Sketch uses 9574 bytes (29%) of program storage space. Maximum is 32256 bytes.
Global variables use 677 bytes (33%) of dynamic memory, leaving 1371 bytes for local variables. Maximum is 2048 bytes.
```

Ln 106, Col 1 Arduino Uno on COM5 [not connected]

Search ENG IN 01:59:10 19-12-2023

APP

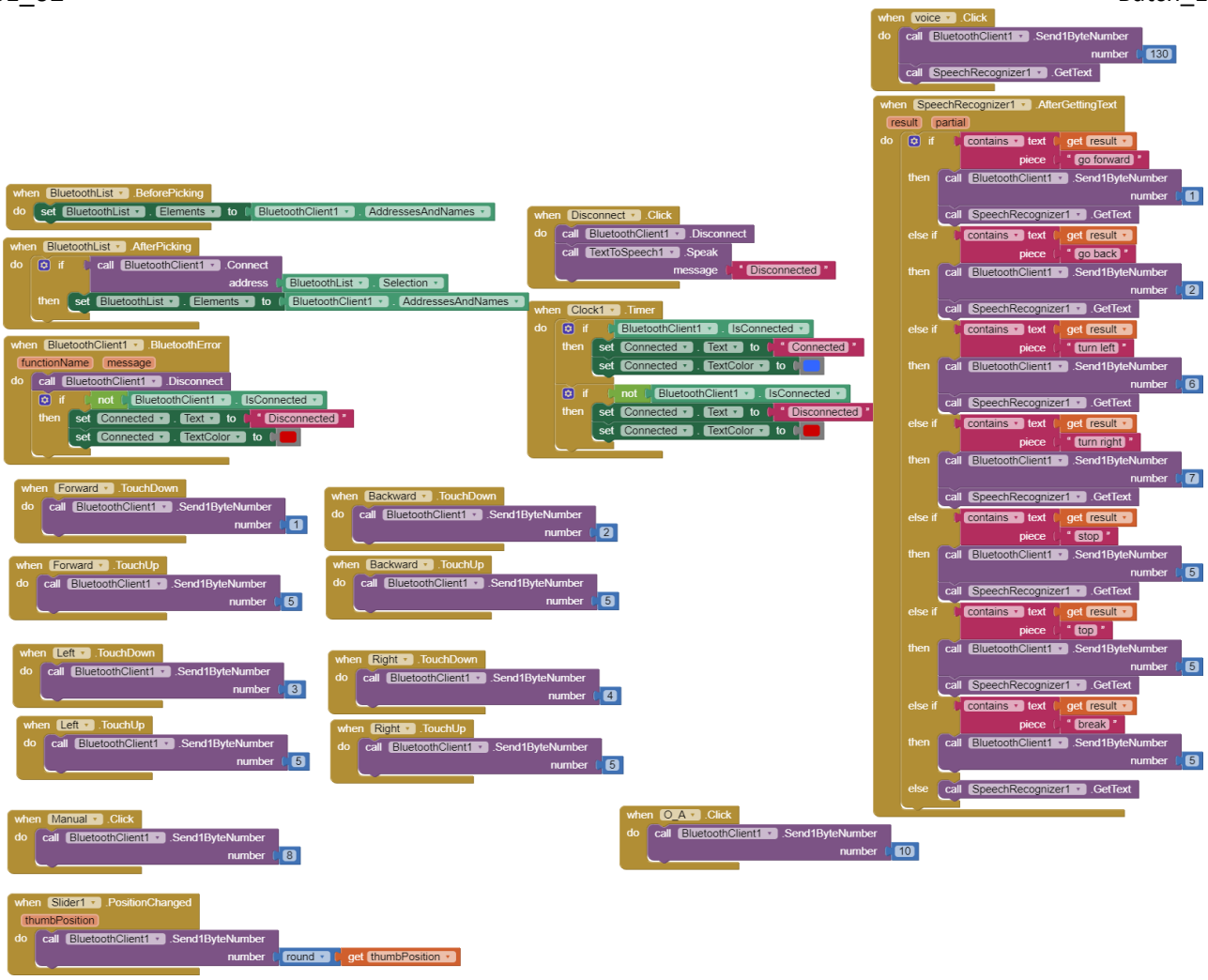

INDIVIDUAL CONTRIBUTION

1. **D Sree Bhargav Reddy(20201CSE0171)**, helped in the connections of model & Code.
2. **M Abhiram Reddy(20201CSE0116)-** Assembling the parts, Building the model, helped in coding part.
3. **Arjun Arun (20201CSE0134)-** Preparation of ppt for review 2, helped in connections of model, helped in preparing report.
4. **B Sravan Kumar Reddy(20201CSE0133)-** Helped in the preparation of ppt, report, and code.
5. **K Babu(20201CSE0171) -**Helped in the preparation of ppt, report, code.